FIREMASTER® PLUS²

TENABLE ZONE / HEAT PROTECTION
ACTIVE FIRE CURTAIN BARRIER ASSEMBLIES

WWW.COOPERSFIRE.COM

coopers
EST. 1983

LEADING THE WAY IN FIRE PROTECTION

MEANS OF ESCAPE PROTECTION

Active Fire Curtain Barrier Assemblies comprise technologically advanced fire-resistant fabric barriers encased in a compact steel housing. Barriers remain invisibly retracted until activated by an alarm or detector signal, at which time they descend safely to their operational position. To be compliant, Fire Barriers must be protected from a short circuit and or total power failure, this is achieved with our patented Total Gravity Fail-Safe (TGFS) system. Fire barriers will stop and control the spread of fire in a building.

The revolutionary FireMaster® Plus² Curtain Barrier uses a fabric that is an exclusive development and woven and produced by Coopers themselves. It uses a unique rapid reaction graphite flake which expands to over 20 times its original thickness on exposure to heat and fire, creating an insulating carbon barrier to heat.

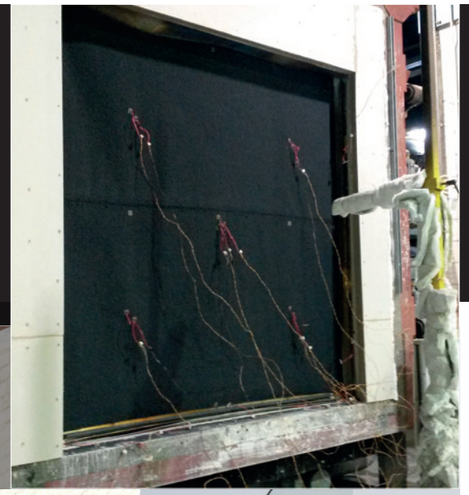

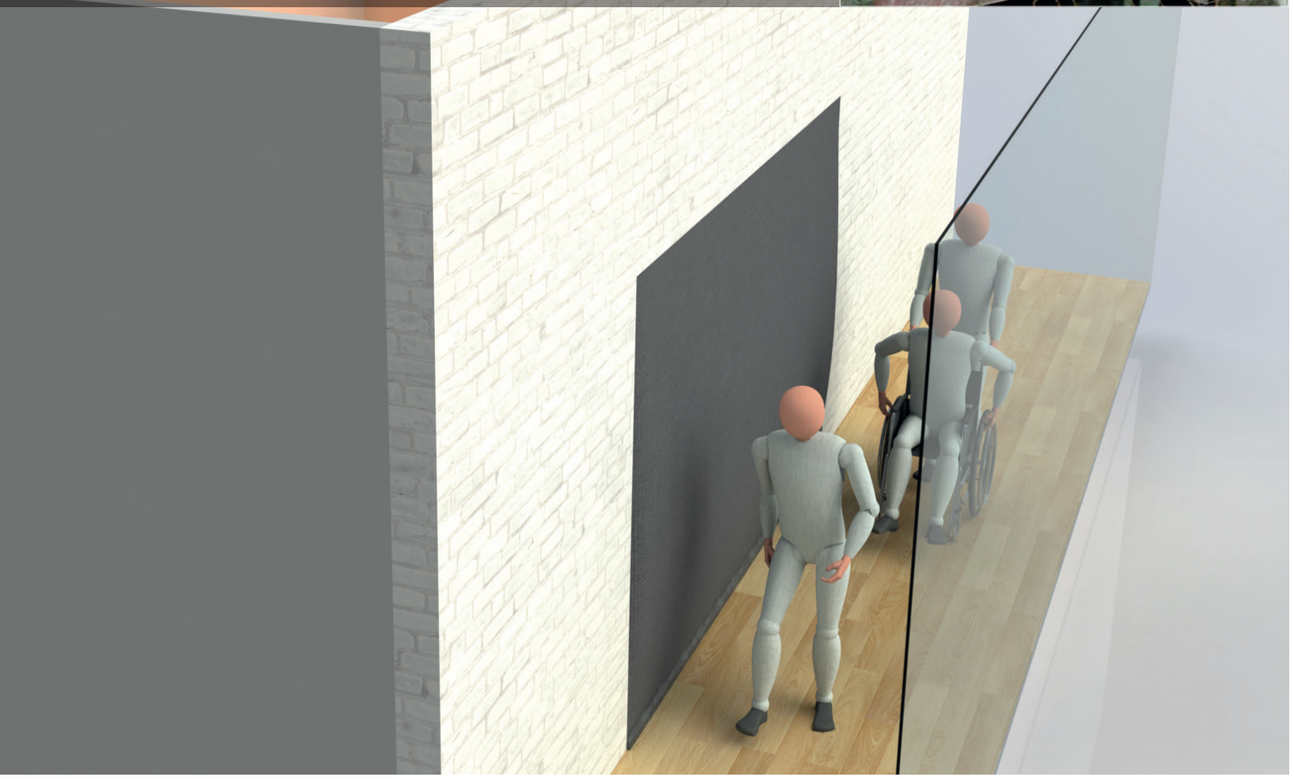

REDUCES RADIANT HEAT

- FireMaster® Plus² reduces radiant heat to under 10 kilowatts per sq mtr for 60 minutes. You can escape safely just a few inches away from a +600°C fire (over 3 times the heat of a domestic oven)

STOP FIRE SPREADING

- FireMaster® Plus² stops fire for 180 minutes and offers a protected means of escape

FAST REACTION TIME

- FireMaster® Plus² expands twice as fast and double the thickness of any other product when exposed to heat and fire

Single Roller Assembly

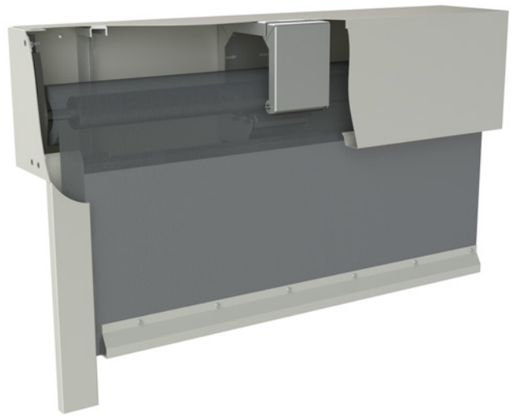

Wide Single Roller Assembly

PRODUCT ADVANTAGES

- Remove walls and partitions to create wide open spaces
- Remove fire doors to make free flowing corridors
- Total Gravity Fail-Safe (TGFS) operation ensures safe rates of descent even following total power loss, wiring, short circuit or system corruption
- Single roller assembly curtains for spans up to 4m as standard and Wide Single Roller assembly curtains for spans over 5m as standard
- Fully synchronised intelligent drive system with ‘slave line’ for multiple rollers
- All barriers allow egress for occupants and access for emergency services

CASE STUDY: SSE HYDRO

GLASGOW UK

At the centre of the SSE Hydro’s interior is its large, open plan atrium purposely designed to complement the venue’s unique exterior looks. However, ensuring that the SSE Hydro’s open plan designs meet stringent fire regulations required a modern alternative to traditional fire protection equipment.

As the leading manufacturer of fire and smoke curtains, Coopers were appointed to protect the un-insulated glazing installed above the atrium’s reception area with an approved fire curtain barrier system approved to provide a 2 hour insulating zone. Coopers also developed a smoke curtain system to provide an unintrusive method capable of controlling smoke migrating from the lower floors.

Coopers installed two FireMaster® Plus fire curtain barriers to deploy vertically to protect the atriums angled glazing situated on the first floor. Developed and installed to meet fire regulations, the FireMaster® Plus fire curtain barriers will provide the SSE Hydros’ un-insulated glazing with an insulating zone approved to protect a means of escape for up to 2 hours.

BENEFITS

- Accredited by Independent Third Party Certification for both Product and Installation
- Manufactured by Coopers in the UK under BS EN ISO 9001 and 14001 systems
- Total Gravity Fail-Safe (TGFS)

INSULATING ZONE - PROTECTED MEANS OF ESCAPE

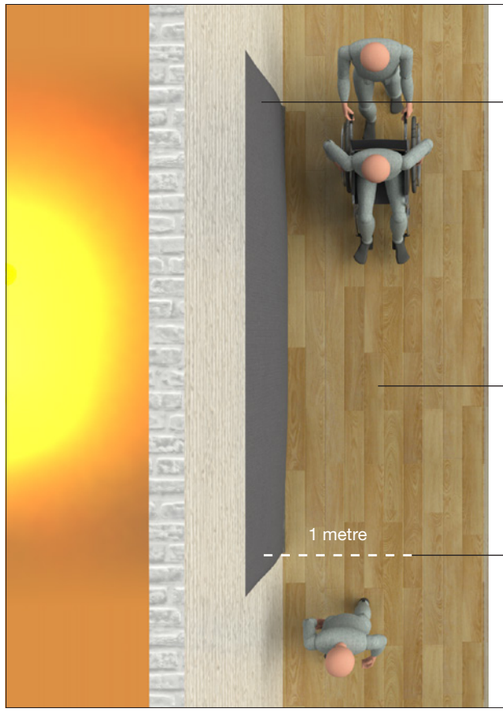

FireMaster® Plus² Fire Curtain
EW60
(60 minutes Radiation)

Means of Escape
Tenable Zone

Maximum Radiant Heat allowed:
15kW/m² at 1 metre distance
FireMaster® Plus² Performance:
Under 5kW/m² at 20 minutes at
1 metre distance

SIDE CHANNELS

Side channels seal the curtain fabric and the building. Fire can cause extreme positive or negative pressures. Side guide channels are made from galvanised steel (available in standard RAL colours) that can be either surface mounted or recessed into the wall structure to give a flush finish. Coopers' unique fabric locking system has been developed and proven over many years.

End Fixed

Face Fixed

Recessed Fixed
(Recommended 5mm gap between side guide and building material)

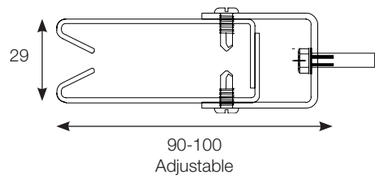

STANDARD HEADBOX SIZES

FMP/H 19/23

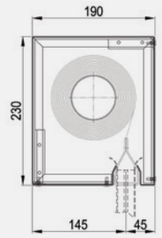

FMP 24/29

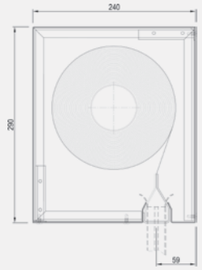

FMP/WSR H

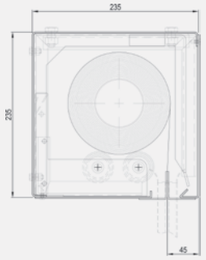

FMP/WSR 25/30

FMP 15/20 SS

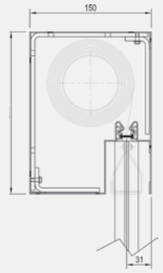

FMP 18/26 SS

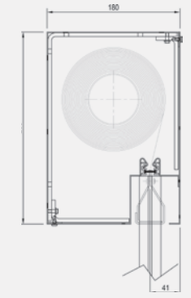

FMP/WSR 30/34

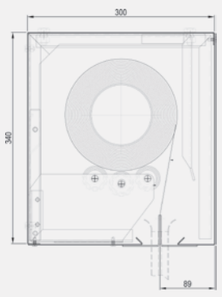

Model No.	Maximum Barrier Width up to	Maximum Barrier Drop up to
FMP/H 19/23	4 metres	4 metres
FMP 15/20/SS	4 metres	2.5 metres
FMP 24/29	4 metres	3 metres
FMP 18/26/SS	4 metres	4 metres
FMP/WSR H	10 metres	4 metres
FMP/WSR 25/30	17 metres	4 metres
FMP/WSR 30/34	17 metres	5 metres

Coopers has a design solution for any size requirement. See the chart below for our standard range of sizes. For queries about special size requirements, please contact our technical department.

HOW THE HEADBOXES ARE INSTALLED

Unistrut and Drop Rods

I Beam

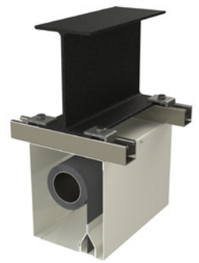

Face Fixed

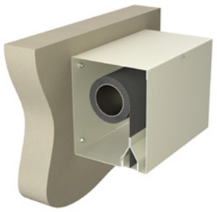

Soffit Fixed

There are many fixing options to suit all types of ceiling configurations. Barriers can be integrated with both solid and suspended ceilings, enabling total project design flexibility.

HOW ARE THE BARRIERS CONCEALED?

FireMaster® Plus² systems provide a range of ceiling interfaces and can even invisibly conceal the barriers in the ceiling whilst still allowing access for service and maintenance. All our systems remain totally concealed when non-operational.

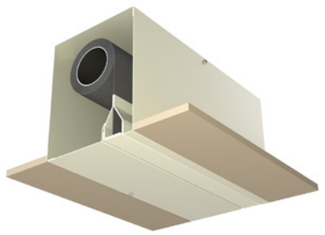

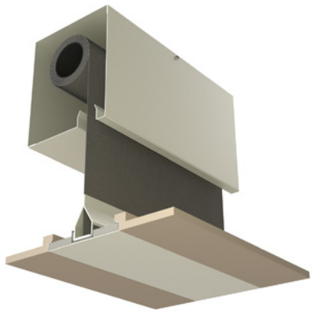

For illustrative purposes only

Flush Fit	Suspended ceiling with SLAT™ (Self Levelling Access Trim) the unique patented Coopers' system	Reinforced Suspended ceiling with recessed shadow gap

HOW IS THE BARRIER ACCESSED?

(Remember, regular service and maintenance is a legal mandatory requirement)

Flush Fit

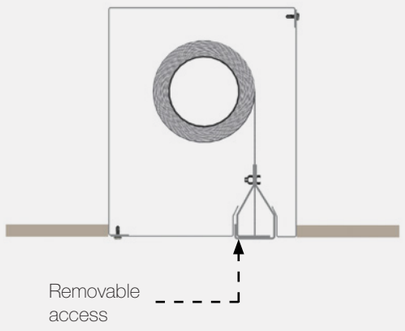

Suspended ceiling with SLAT™ (Self Levelling Access Trim) the unique patented Coopers' system

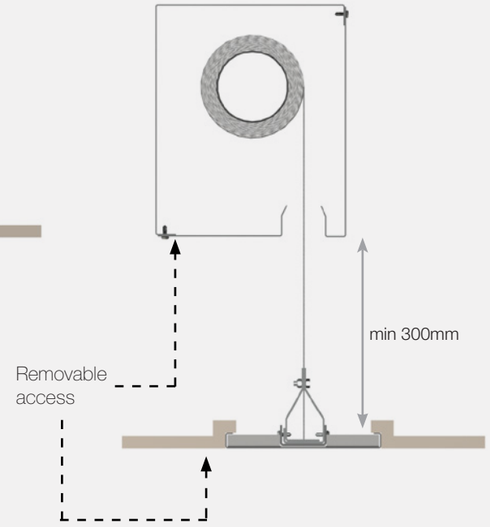

Reinforced Suspended ceiling with recessed shadow gap

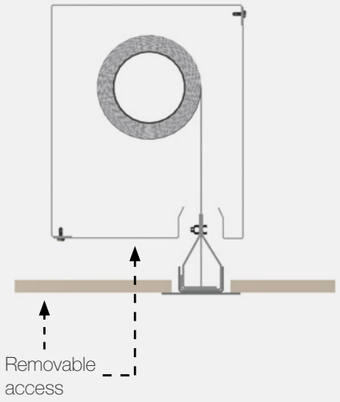

CONTROL OPTIONS

Controls are custom made to be fully compatible with both existing alarm systems and the number of barrier units installed, whether single or multiple roller assemblies.

Coopers also design and build Grouped Control Panels to accomodate customers requirements. This allows all controls to be installed within a single enclosure for easier installation, commissioning, servicing and reduction in field wiring. Please contact Coopers for more information on Grouped Controls.

When an alarm signal is detected, the control panel will automatically trigger all the Barrier systems to deploy by controlled descent using our unique Total Gravity Fail-Safe (TGFS) system.

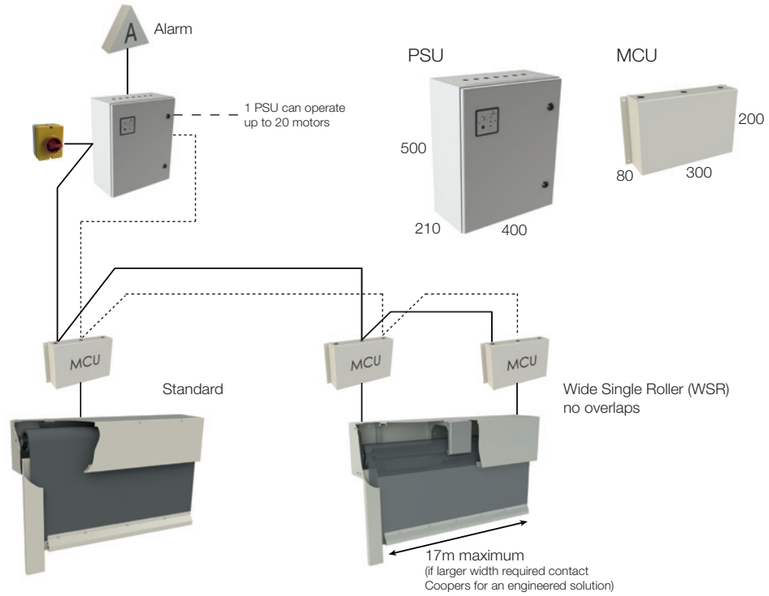

PRODUCT SPECIFICATION

The complete system is tested for 180 minutes (3 hrs) to BS EN 1634-1:2008 and is classified as E180 EW60 S_a C2 Grade 3 in accordance BS EN 13501 2:2007+A1:2009.

The fabric is additionally tested for fire propagation to BS 476 6:1989+A1:2009 and surface spread of flame to BS 476-7:1997 to achieve National Class '0' in accordance with A13(b) of Approved Document B (Volumes 1 & 2) 2006 Edition 'Fire Safety' to England & Wales Building Regulations 2000.

EFP™ 2/1000/DGI is a high performance textile composite material of woven glass fibre with an intumescent graphite silicone coating on both sides. This forms a rapid, expanding carbonaceous char at 160°C and reduces heat radiation.This coating was developed and used first by Coopers Fire.

DON'T BE LIABLE

Fire Curtain Barriers MUST have a 'Total' Fail-Safe by Gravity* in the event of total mains, wiring, short circuit and/or system corruption.

Coopers Fire, with their unique patented Total Gravity Fail-Safe (TGFS) system, are the only supplier with Independant Third Party Certification by a UKAS approved certification body to BSI PAS 121:2007 and now meets essential requirements of BS 8524-1:2013.

CONTROLS SPECIFICATION

POWER SUPPLY
230V AC 50Hz dedicated supply via all pole isolator

BATTERIES
2 x 12V 12A/h lead acid batteries

ALARM SIGNAL
Normally closed volt-free contacts. Open on activation

TEST FACILITY
Zone Control Panel (ZCP) located on front of Power Supply Unit (PSU)

DISPLAY
Power ON, Alarm ACTIVE and Alarm OFF status LED's on ZCP

POWER SUPPLY SIZE
400mm(w) x 500mm(h) x 210mm(d)

MOTOR CONTROL UNIT SIZE
300mm(w) x 200mm(h) x 80mm(d)

QUALITY ASSURANCE AND CERTIFICATION

MEMBERSHIP

CPD ACCREDITATIONS

For information, to get a quote
or to book a CPD workshop

Please call:
+44 (0)2392 454 405

or E-mail: info@coopersfire.com

WWW.COOPERSFIRE.COM

Coopers Fire Ltd,
Edward House, Penner Road,
Havant, Hampshire, PO9 1QZ
United Kingdom

Phone: +44 (0)2392 454 405
Fax: +44 (0)2392 492 732
Email: info@coopersfire.com
Web: www.coopersfire.com

Coopers Fire Ltd has a policy of continuous product improvement.

As such we reserve the right to change design and specifications without prior notice.

Please check our website for the latest information.

© Coopers Fire Ltd. All content and products are copyright of Coopers Fire Ltd. Registered in England Number: 2010274.
*Multiple patents granted and pending.

Series 2 v08 May 2018

coopers
EST. 1983

LEADING THE WAY IN FIRE PROTECTION